Honeywell Home

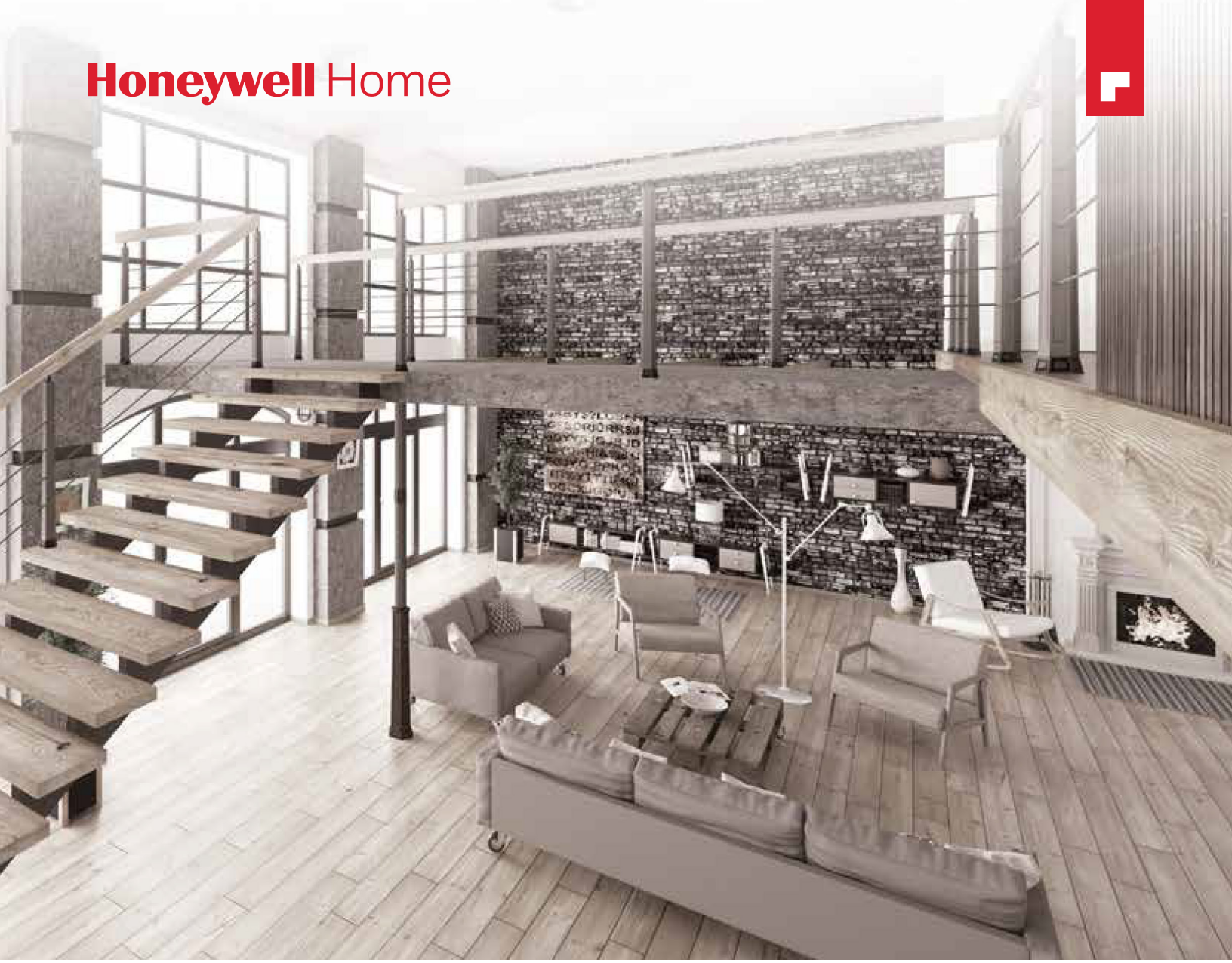

# Zoning Selection Guide

Select the Right Zoning Products for Your Application

## Choose Your Zoning System In 4 Easy Steps

Steps 3 and 4 The Same For All Zoning Systems.

### STEP 1: SELECT A ZONE PANEL KIT

| | |
|---|---|
| Kits include:<br>TrueZONE® Panel<br>C7735A1000 Discharge Air Temperature Sensor<br>AT140A1042 40VA Transformer | |
| Kits: | |
| HZ432K | For conventional, heat pump or dual fuel applications up to 4 zones expandable to 32 zones* (3H/2C) |
| HZ322K | For conventional or heat pump applications up to 3 zones (2H/2C) |
| HZ311K | For conventional applications up to 3 zones (1H/1C) |
| HZ221K | For single stage heat pump applications with auxillary heat up to 2 zones (2H/1C) |
| *Every additional 4 zones requires one TAZ-4 Expansion Panel and AT140A1042 Transformer | |

### STEP 2: SELECT A THERMOSTAT FOR EACH ZONE*

| | |
|---|---|
| Wired thermostats: | |
| IAQ thermostat: | |
| TH8321WF1001 | Wi-Fi 8000 |
| TH8321R1001 | RedLINK 8000 |
| Non IAQ models: | |
| TH6320WF2003 | Lyric T6 Wi-Fi with Vent Control 3H/2C heat-pump or 2H/2C conv. |
| TH6220WF2006 | Lyric T6 Wi-Fi 2H/1C heat-pump or 2H/2C conv. |
| TH6320U2008 | T6 Pro 3H/2C heat-pump or 2H/2C conv. |
| TH6220U2000 | T6 Pro 2H/1C heat-pump or 2H/2C conv. |
| TH6210U2001 | T6 Pro 2H/1C heat-pump or 1H/1C conv. |
| Note: Most other wired thermostat options are compatible with the Honeywell TrueZONE panels.. | |
| Wireless Thermostats: (use with HZ322 or HZ432 Redlink panels) | |
| IAQ thermostat: | |
| YTHX9421R5085 | Prestige IAQ kit. EIM wired to zone panel. R anc C only at thermostat |
| TH8321R1001 | RedLINK 8000 IAQ. THM5421R1021 EIM ordered separate |
| Non IAQ models | |
| TH8320R1003 * | RedLINK 8000. 3H/2C heat pump. 2H/2C conventional |
| TH8110R1008 * | RedLINK 8000. 1H/1C heat pump. 1H/1C conventional |
| TH6320R1004 * | RedLINK programmable FocusPRO. 3H/2C heat pump. 2H/2C conventional |
| TH5320R1002 * | RedLINK NP FocusPRO. 3H/2C heat pump. 2H/2C conventional |
| *THM4000R adaptor required when using wireless thermostats to HZ322 or HZ432. One THM4000R per zone panel. EIM used<br>instead of THM4000R if IAQ controlled by TH8321R. Cannot use TAZ-4 add-a-zone if THM4000R wireless adaptor is used. | |

### STEP 3: SELECT ZONING DAMPERS

| | |
|---|---|
| ARD and ZD dampers are 2-wire, spring-open/power closed. Additional ZD and ARD damper sizes available.<br>RRD dampers are 3-wire, power-open/power-closed | |
| Rectangular Supply Dampers-common sizes. Motor mounted on 2nd dimension | |
| ZD10x8TZ | ZD18x8TZ |
| ZD12x8TZ | ZD20x8TZ |
| ZD14x8TZ | ZD20x10TZ |
| ZD16x8TZ | ZD24x8TZ |
| Round Supply Dampers-common size | |
| ARD6TZ | ARD14TZ |
| ARD8TZ | ARD16TZ |
| ARD10TZ | ARD18TZ |
| ARD12TZ | ARD9TZ |
| Retrofit Round Dampers | |
| RRD5 | RRD7 |
| RRD6 | RRD8 |

| | |
|---|---|
| : | |
| CPRD8 | |
| CPRD10 | |
| CPRD12 | |
| CPRD14 | |

| | |
|---|---|
| APPLICATION | |
| WIRED THERMOSTATS | 2 ZONES. WIRED T |
| | 3 ZONES. WIRED T |
| | 4-32 ZONES |
| WIRELESS THERMOSTATS | 2-3 zones WIRELE ZONING With TH63 TH5320R RedLINK THERMOSTATS |
| | 4 zones WIRELESS TH6320R or TH53 WIRELESS THERM |
| | 2-3 zones WIRELE With TH8110R, TH TH8321R RedLINK THERMOSTATS |
| | 4 zones WIRELESS With TH8110R, TH TH8321R RedLINK THERMOSTATS |
| | 5-32 zones WIREL ZONING With TH63 TH5320R RedLINK THERMOSTATS |
| | 5-32 zones WIREL With TH8110R, TH TH8321R RedLINK THERMOSTATS |

## STEP 4: SELECT BYPASS DAMPERS

Calculate Total CFM, Then Choose Supply-To-Return Bypass

_____-_____=_____

Total CFM of system (minus) CFM smallest zone (equals) Total CFM to bypass

(Bypass sized @.25 in. w.c)

| CFM RANGE |
|---|
| up to 600 CFM |
| up to 1000 CFM |
| up to 1400 CFM |
| up to1700 CFM |

## ZONING CONTROL PANEL SELECTION GUIDE

| | CONVENTIONAL 1-HEAT/1-COOL | HEAT PUMP WITH SINGLE STAGE COMPRESSOR AND ELECTRIC AUXILIARY HEAT STAGE. | GAS FURNACE WITH 2 HEAT STAGES AND 2 COOL STAGES. HEATPUMP WITH 2 COMPRESSOR STAGES AND NO AUXILIARY HEAT. HEATPUMP WITH 1 COMPRESSOR STAGE + AUXILIARY HEAT. HYDROAIR HEAT. | HEATPUMP WITH 2 COMPRESSOR STAGES + AUXILIARY HEAT. DUAL FUEL HEATPUMP WITH 1-2 COMPRESSOR STAGES + 1-2 FURNACE STAGES. 3 CONVENTIONAL HEAT STAGES + 1-2 COOL STAGES. |
|---|---|---|---|---|
| THERMOSTATS | HZ311K | HZ221K (Heatpump thermostats with O wire only. For conventional thermostats or heatpump thermostats with B changeover, use HZ322K. | HZ322K | HZ432K (C7089U1006 wired outdoor sensor needed for dual fuel) |
| HERMOSTATS | HZ311K | HZ322K | HZ322K | HZ432K (C7089U1006 wired outdoor sensor needed for dual fuel) |
| | HZ432K for the first 4 zones. Add a TAZ-4 + separate transformer for each additional 4 zones | | | HZ432K for the first 4 zones. Add a TAZ-4 + separate transformer for each additional 4 zones, ( C7089U1006 wired outdoor sensor needed for dual fuel) |
| | | | | |
| SS 320R or K WIRELESS | HZ322K + THM4000R adaptor | | | HZ432K + THM4000R adaptor (C7089R1013 wireless outdoor sensor needed for dual fuel) |
| ZONING With 320R RedLINK OSTATS | HZ432K + THM4000R adaptor | | | |
| SS ZONING H8320R, or K WIRELESS | HZ322K + THM4000R adaptor. (Cannot do remote scheduling when THM4000R and THM6000R gateway are used. TH8321R loses IAQ control when used with THM4000R) | | | HZ432K + THM4000R adaptor. (TH8110R, TH8320R, and TH8320R models can do remote scheduling when wired to the panel. These models cannot do remote scheduling when THM4000R and THM6000R gateway are used. TH8321R loses IAQ control when used with THM4000R). (C7089R1013 wireless outdoor sensor needed for dual fuel) |
| ZONING H8320R, or K WIRELESS | HZ432K + THM4000R adaptor. (Cannot do remote scheduling when THM4000R and THM6000R gateway are used. TH8321R loses IAQ control when used with THM4000R) | | | |
| ESS 320R or K WIRELESS | HZ432K for the first 4 zones. Add a TAZ-4 + separate transformer for each additional 4 zones. THM4000 CANNOT be used for systems with over 5 zones. A separate THM5320R EIM is needed for each TH5320R or TH6320R wireless thermostat. (C7089U1006 wired outdoor sensor needed for dual fuel) | | | |
| ESS ZONING H8320R, or K WIRELESS | HZ432K for the first 4 zones. Add a TAZ-4 + separate transformer for each additional 4 zones. THM4000 CANNOT be used for systems with over 5 zones. A separate THM5421R1021 EIM is needed for each TH8110R, TH8320R, or TH8321R wireless thermostat. EIMs should be spaced at least 2 feet apart. (C7089U1006 wired outdoor sensor needed for dual fuel) | | | |

## RedLINK™ Zoning Options

With IAQ control from zone 1 stat.

See figure 1 below for basic wiring

**OPTION A: 2-3 ZONES**

1-2 STAGE FURNACE + 1-2 STAGE COOLING OR SINGLE STAGE HEAT-PUMP + ELECTRIC HEAT-STRIPS FOR AUXILIARY HEAT. NO DUAL FUEL.

| Parts list: | Description | Quantity |
|---|---|---|
| HZ322K zone panel kit | Includes HZ322 zone panel, C7735A1000 discharge sensor, and AT140A1042 transformer | 1 |
| IAQ thermostat | Either THX9421R5021 Prestige or TH8321R1001 for zone 1 | 1 |
| THM5421R1021 | EIM for zone 1 IAQ thermostat | 1 |
| TH8320R1003 | RedLINK 8000 thermostat(s) for zones 2-3 | 1–2 |
| THM4000R1000 | Wireless adaptor for zones not controlling the IAQ equipment | 1 |
| Appropriate zone dampers and by-pass damper for the application | | |

**OPTION B: 2-4 ZONES**

1-3 STAGE FURNACE + 1-2 STAGE COOLING, OR 1-2 STAGE HEAT-PUMP + ELECTRIC HEAT-STRIPS FOR AUXILIARY HEAT

| Parts list: | Description | Quantity |
|---|---|---|
| HZ432K zone panel kit | Includes HZ322 zone panel, C7735A1000 discharge sensor, and AT140A1042 transformer | 1 |
| IAQ thermostat | Either THX9421R5021 Prestige or TH8321R1001 for zone 1 | 1 |
| THM5421R1021 | EIM for zone 1 IAQ thermostat | 1 |
| TH8320R1003 | RedLINK 8000 thermostat(s) for zones 2-4 | 1–3 |
| THM4000R1000 | Wireless adaptor for zones not controlling the IAQ equipment | 1 |
| Appropriate zone dampers and by-pass damper for the application | | |

**OPTION C: 2-4 ZONES**

DUAL FUEL. 1-2 STAGE HEAT-PUMP + 1-2 STAGE GAS FURNACE

| Parts list: | Description | Quantity |
|---|---|---|
| HZ432K zone panel kit | Includes HZ322 zone panel, C7735A1000 discharge sensor, and AT140A1042 transformer | 1 |
| IAQ thermostat | Either THX9421R5021 Prestige or TH8321R1001 for zone 1 | 1 |
| THM5421R1021 | EIM for zone 1 IAQ thermostat | 1 |
| TH8320R1003 | RedLINK 8000 thermostat(s) for zones 2-4 | 1–2 |
| THM4000R1000 | Wireless adaptor for zones not controlling the IAQ equipment | 1 |
| C7089R1013 | Wireless outdoor sensor for dual fuel changeover | 1 |
| Appropriate zone dampers and by-pass damper for the application | | |

Fig. 1. Zoning with IAQ equipment

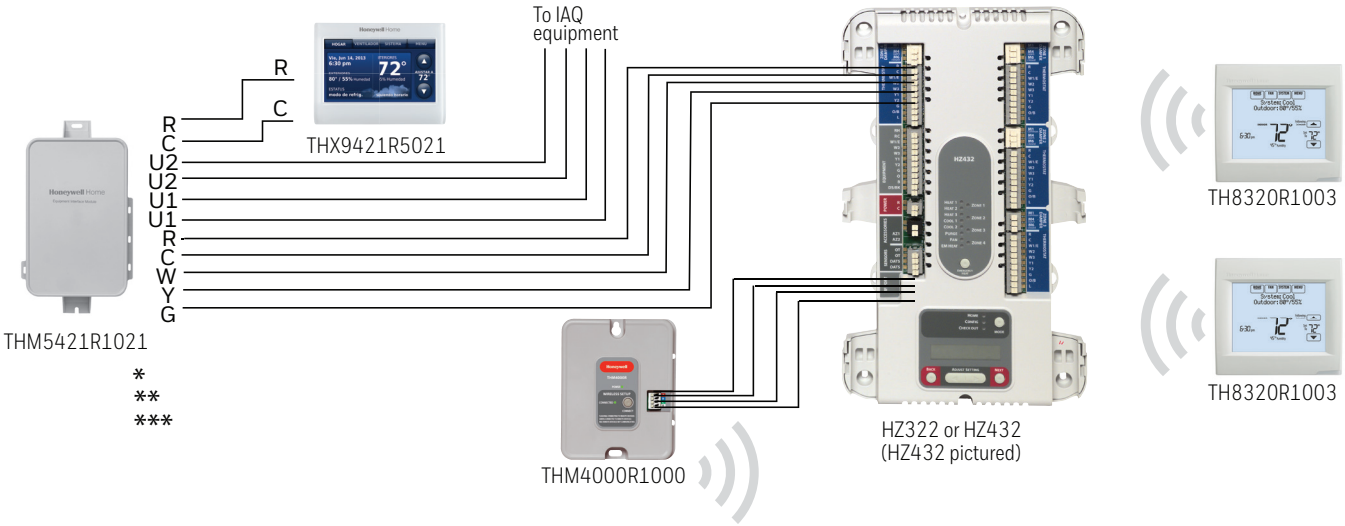


* The subbase of each THX9421R5021 thermostat needs to be wired to a 24 volt transformer. This can either be the transformer that powers the zone panel or a separate transformer.

** EIMs and adaptors need to be at least 2 feet apart from each other.

*** The supply and return sensors included in the YTHX9421 2.0 Prestige IAQ kits are not used in zoning applications. The thermostats cannot be set for Delta-T diagnostics when used in zoning applications.

## RedLINK™ Zoning Options

With IAQ control from zone 1 stat.

See figure 2 below for basic wiring

| OPTION D: MORE THAN 4 ZONES (CANNOT USE THM4000R WIRELESS ADAPTOR) | | | |
|---|---|---|---|
| 1-3 STAGE FURNACE + 1-2 STAGE COOLING, HEAT-PUMP WITH 1-2 COMPRESSOR STAGES + AUXILIARY HEAT, OR 1-2 STAGE HEAT-PUMP + 1-2 STAGE GAS FURNACE (DUAL FUEL) | | | |
| | Parts list: | Description | Quantity |
| | HZ432K zone panel kit | Includes HZ322 zone panel, C7735A1000 discharge sensor, and AT140A1042 transformer | 1 |
| | TAZ-4 | Add-a-zone panel | 1 per each additional 4 zones |
| | AT140A1042 | 40VA transformer | 1 per TAZ-4 panel |
| | IAQ thermostat | Either THX9421R5021 Prestige or TH8321R1001 for zone 1. (If IAQ control is desired) | 1 |
| | TH8320R1003 | RedLINK 8000 thermostat(s) | 1 for each wireless, non IAQ zone |
| | THM5421R1021 | EIM for zone 1 IAQ thermostat or any zones that are wireless. (separate for each thermostat) | 1 for each wireless thermostat |
| | Note: Most wired thermostats are compatible if wireless thermostats are not desired. | | |
| | C7089U1006 | Wired outdoor sensor (required for dual fuel applications only) | 1 |

Fig. 2. More than 4 zones

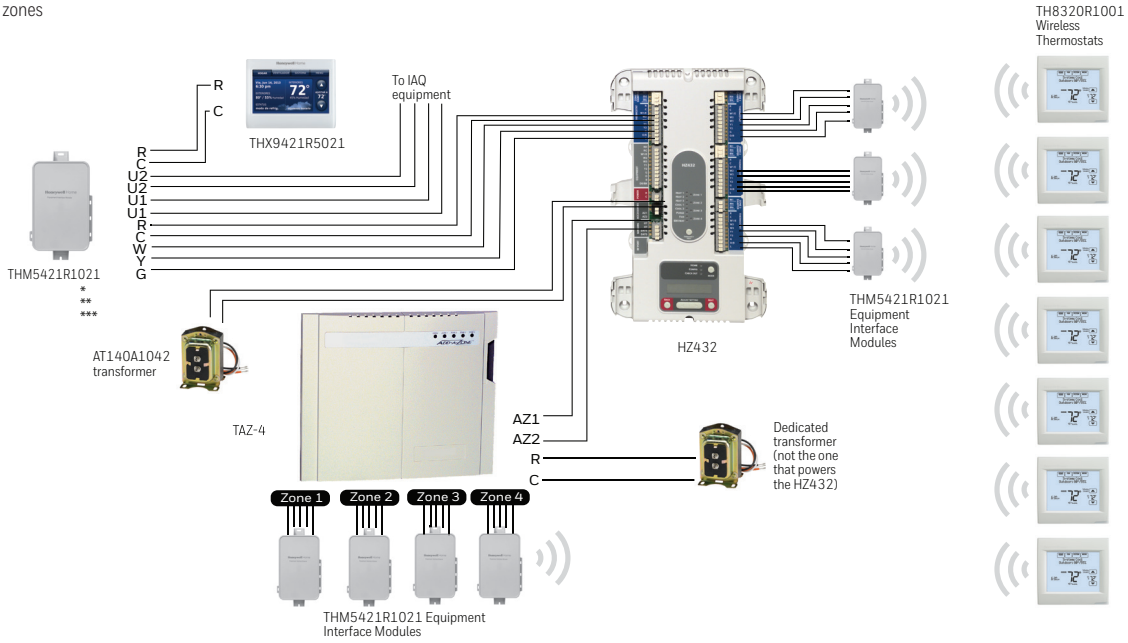


* The subbase of each THX9421R5021 thermostat needs to be wired to a 24 volt transformer. This can either be the transformer that powers the zone panel or a separate transformer.
** EIMs need to be at least 2 feet apart from each other.
*** The supply and return sensors included in the YTHX9421 Prestige IAQ kits are not used in zoning applications. The thermostats cannot be set for Delta-T diagnostics when used in zoning applications.

## RedLINK™ Zoning Options

| NO IAQ EQUIPMENT OR ECONOMIZER CONTROL |
|---|
| For any of the 2-4 zone applications listed in this document that do not need to control a Humidifier, Dehumidifier, Ventilator, economizer, or Remote Indoor Sensor, you can eliminate the THM5421R1021. You can use TH8320R1003 or THX9421R5021 thermostats for all zones and enroll all the RedLINK thermostat to the THM4000R *** wireless adaptor.. |

Fig. 3. No IAQ equipment

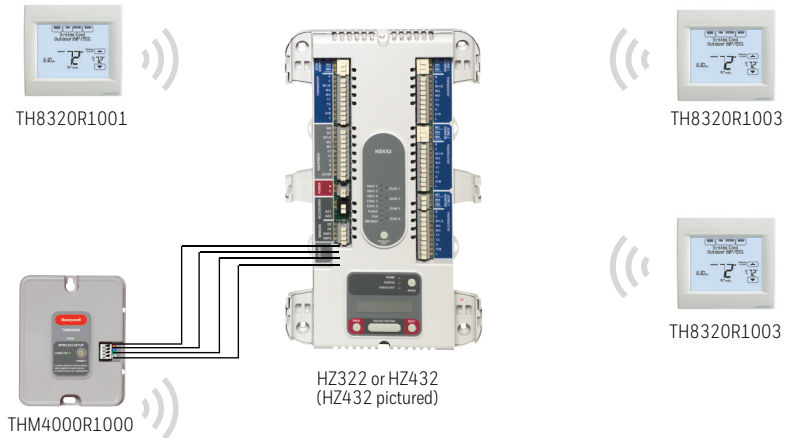

# Resideo Zoning Commitment

Resideo zoning systems are built with you, the contractor, in mind. Resideo understands that customer satisfaction, as well as profit, are important to your business. That's why Resideo zoning systems are built for installation simplicity and reduced callbacks. Resideo is committed to delivering the most reliable zone panels and dampers in the industry wto help keep your customers and your bottom line in the comfort zone.

**For more information**
resideo.com/pro

resideo

**Resideo Technologies, Inc.**
1985 Douglas Drive North
Golden Valley, MN 55422
1-800-468-1502
resideo.com

Doc | SC | 06/20
© 2020 Resideo Technologies, Inc. All rights reserved. The Honeywell Home trademark is used under license from Honeywell International, Inc. This product is manufactured by Resideo Technologies, Inc., and its affiliates.

Honeywell Home